Electrolux PROFESSIONAL

Drop-In
Drop-in refrigerated well, static (6 GN container capacity)

ITEM #

MODEL #

NAME #

SIS #

AIA #

341040 (D10C6)	Drop-in refrigerated well, static (6 GN container capacity)

Short Form Specification

Item No.

Designed to be positioned in flush installation providing improved cleanability and suitable for modern design installations. Designed to serve the food in gastronorm containers with a maximum height of 200mm. Food introduced at the correct temperature maintains its core temperature according to Afnor Standards. Automatic defrosting guarantees evaporators clearance and efficient well cooling. Digital control with temperature display with precise adjustment (0,1°C). Fully compliant HACCP digital controls include visible alarms. Wells in 304 AISI stainless steel with rounded corners to facilitate cleaning operations. The well is also equipped with a drain hole. High-density expanded polyurethane foam with cyclopenthane guarantees excellent well insulation to reduce energy dispersion. R290 refrigerant gas (GWP=3) to reduce environmental impact and increase cooling efficiency. The bottom is equipped with copper tubes to ensure proper cooling, with this system the air touches the cold surface and gets cooled.

APPROVAL:

Main Features

- CB and CE certifed by a third party notified body.
- Designed to be positioned in flush installation providing improved cleanability and suitable for modern design installations.
- Designed to serve the food in gastronorm containers.
- Suitable for GN 1/1 containers with a maximum height of 200 mm.
- Precise temperature control and setting at 0,1°C .
- As standard the product comes with digitally controlled thermostat which is in line of HACCP norms and provides visual alarm as a warning of the increasing or decreasing temperatures.
- Available drop-in dimensions: 1, 2, 3, 4, 5, 6 GN.
- Food introduced at the correct temperature maintains its core temperature according to Afnor Standards.
- Automatic defrosting guarantees evaporators clearance and efficient well cooling.
- Remote version is available.

Construction

- Well bottom is inclined to facilitate water drainage.
- Well in 304 AISI stainless steel with rounded corners to facilitate cleaning operations. The well is also equipped with a drain hole.
- Electronic control with temperature display.
- IPx2 water protection.
- The bottom is equipped with copper tubes to ensure proper cooling, with this system the air touches the cold surface and gets cooled.

Sustainability

- Hydrocarbon refrigerant gas R290 for the lowest environmental impact (GWP=3) - CFC and HCFC free.
- High-density expanded polyurethane foam with cyclopenthane guarantees excellent well insulation to reduce energy dispersion.

Drop-In
Drop-in refrigerated well, static (6 GN container capacity)

Rear side

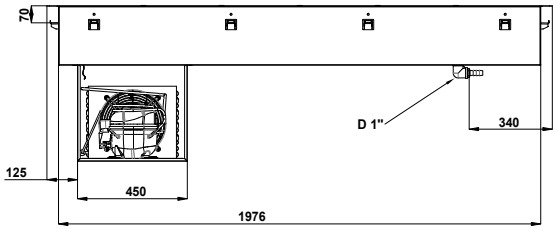

Side

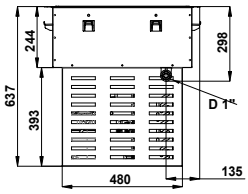

D = Drain
EI = Electrical inlet (power)

Top

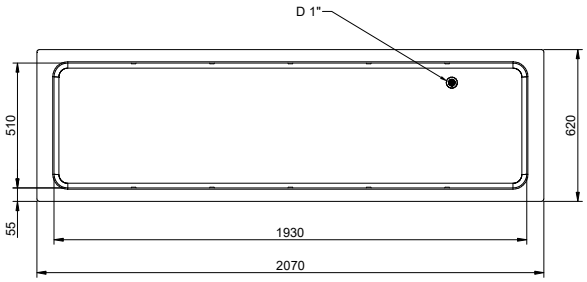

Electric

Supply voltage:	
341040 (D10C6)	220-240 V/1N ph/50 Hz
Electrical power max.:	0.61 kW

Water:

Water drain outlet size:	1"

Key Information:

External dimensions, Width:	2070 mm
External dimensions, Depth:	620 mm
External dimensions, Height:	595 mm
Net weight:	69.9 kg
Shipping weight:	1 kg
Shipping height:	1 mm
Shipping width:	1 mm
Shipping depth:	2150 mm
Shipping volume:	
Set temperature:	-15 / 0 °C

Refrigeration Data

Refrigerant type:	R290

Sustainability

Noise level:	56 dBA

The company reserves the right to make modifications to the products without prior notice. All information correct at time of printing.

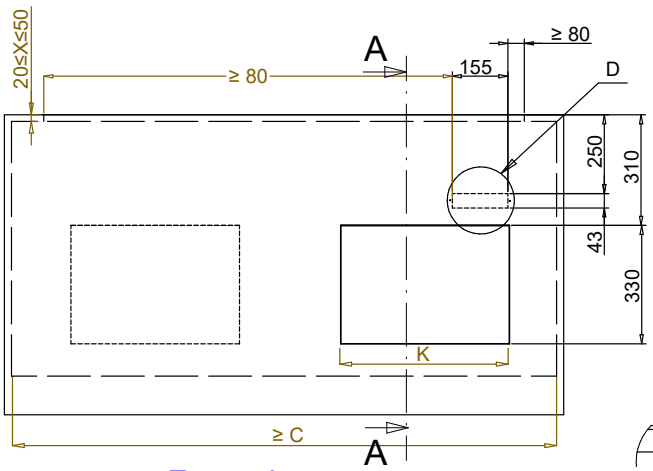

Front view
Scala: 1:10

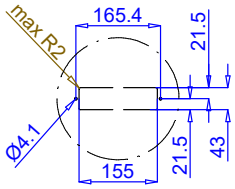

Dettaglio D
Scala 1:7

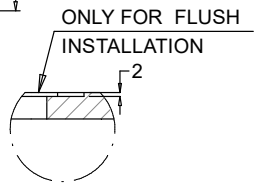

Dettaglio B
Scala 1:2

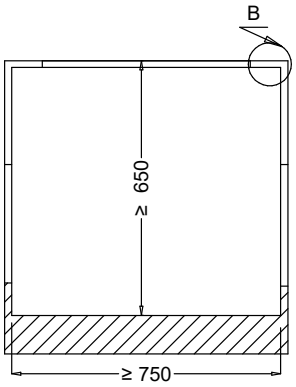

Section Cut A-A
Scala: 1:10

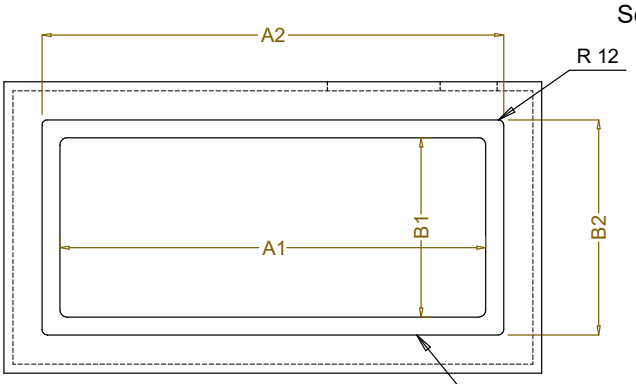

Top view
Scala: 1:10

CAPACITY	CUTOUT		LOWERING FOR FLUSH INSTALLATION		C	K
	A1	B1	A2	B2		
1GN	380	580	454	624	560	380
2GN	700		774		880	470
3GN	1030		1104		1200	
4GN	1350		1424		1530	
5GN	1670		1744		1850	
6GN	2000		2074		2180	

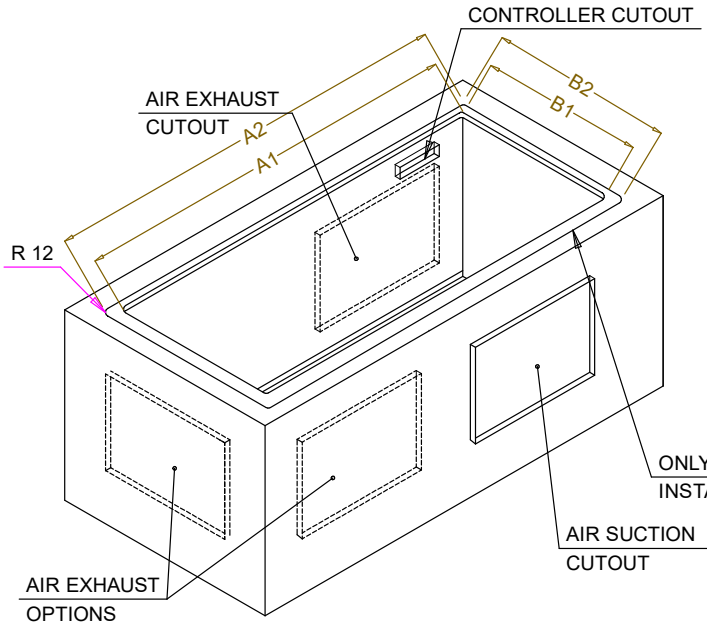

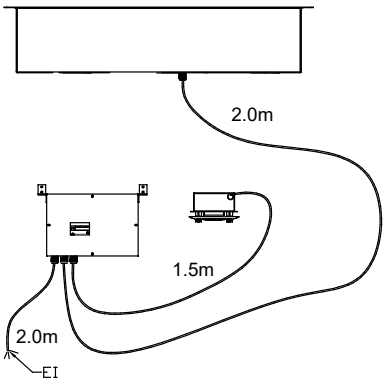

595T01S00 - COLD STATIC WELL

The company reserves the right to make modifications to the products without prior notice. All information correct at time of printing.

2024.10.08